This drawing and specifications, herein, are the property of Digital Equipment Corporation and shall not be reproduced or copied or used in whole or in part as the basis for the manufacture or sale of items without written permission.

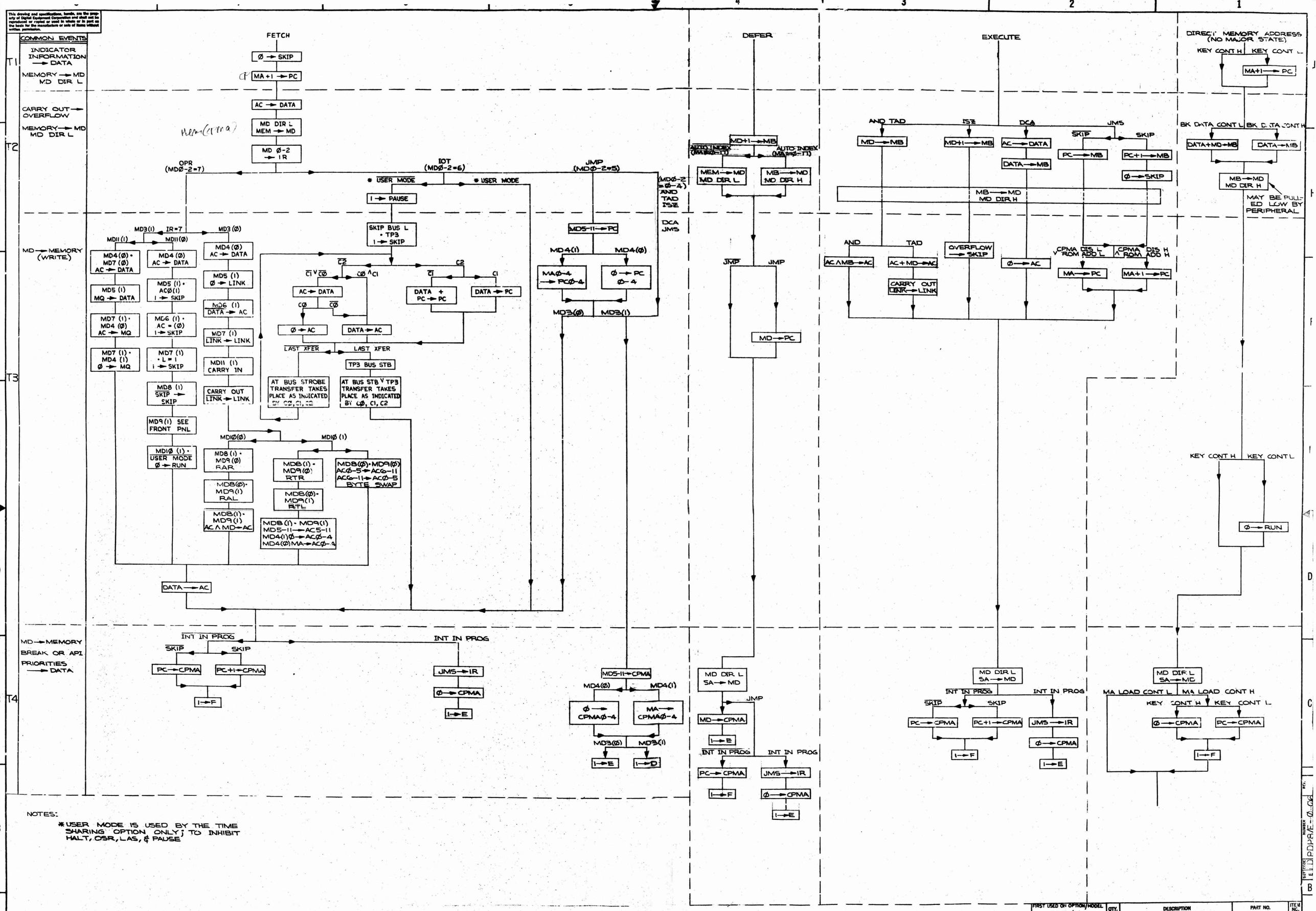

NOTES:

*USER MODE IS USED BY THE TIME SHARING OPTION ONLY; TO INHIBIT HALT, OSR, LAS, & PAUSE

FIRST USED ON OPTION/MODEL: PDP8/E	QTY.	DESCRIPTION	PART NO. / ITEM NO.
PARTS LIST			
UNLESS OTHERWISE SPECIFIED: DIMENSION IN INCHES; TOLERANCES: DECIMALS ± .005, FRACTIONS ± 1/64, ANGLES ± 0°30'; FINAL SURFACE QUALITY √; REMOVE BURRS AND BREAK SHARP CORNERS	DRN. Cook DATE 1/6/71	digital EQUIPMENT CORPORATION MAYNARD, MASSACHUSETTS	
	CHKD. DATE 1/14/71	TITLE PROCESSOR FLOW CHART	
	ENG. DATE 1/25/71		
	PROJ. ENG. DATE 1/28/71		
MATERIAL: —	PROD. DATE 1/25/71		
	NEXT/HIGHER ASSY. A-ML-PDP8/E-Ø		
FINISH: —	SCALE —	SIZE E CODE FD NUMBER PDP8/E-Ø-Ø6 REV.	
	SHEET 1 OF 1	DIST.	

REVISIONS: REV. / CHANGE NO. / CHK.

DEC FORM 940, DNE 3/70

BUT CODE E E D NUMBER PDP8/E-0-06 REV.