This drawing and specifications, herein, are the property of Digital Equipment Corporation and shall not be reproduced or copied or used in whole or in part as the basis for the manufacture or sale of items without written permission.

NOTES

1. ITEM NO.5 (MOMENTARY SWITCH) TO BE INSTALLED SO THAT ROCKER HANDLE IS DOWN WHEN IN "OFF" POSITION. THIS LOCATION ONLY.

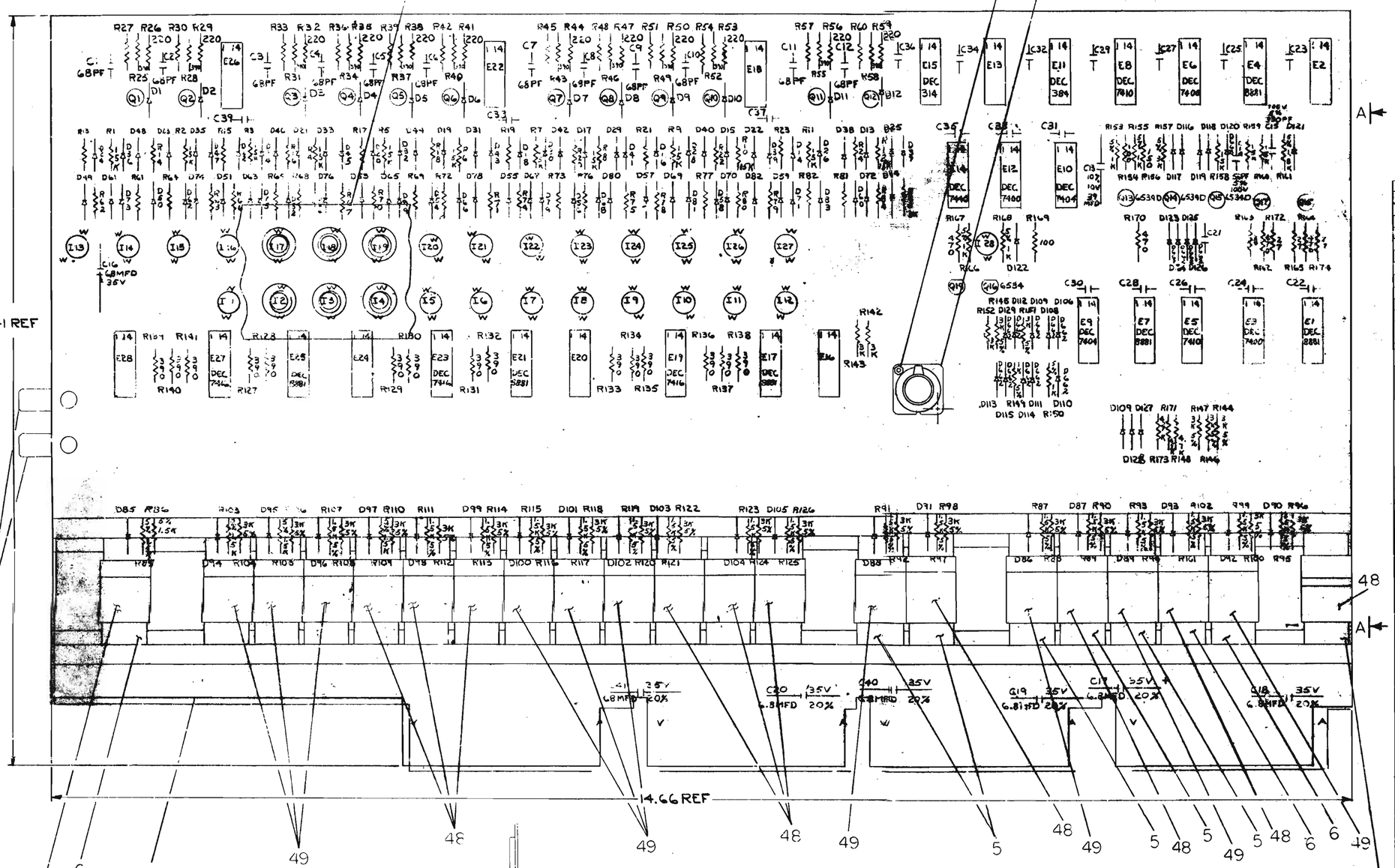

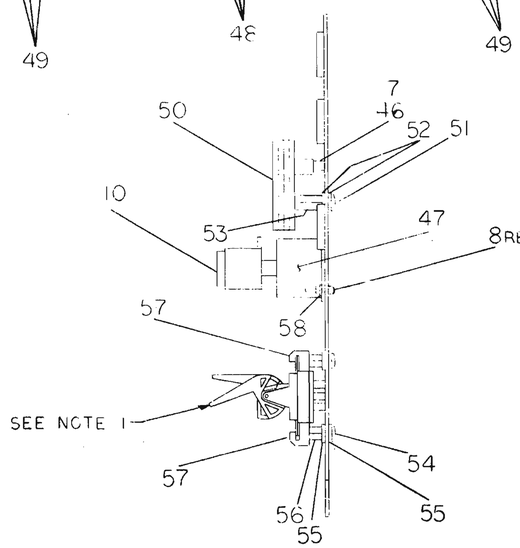

VIEW A-A
SCALE 1/1

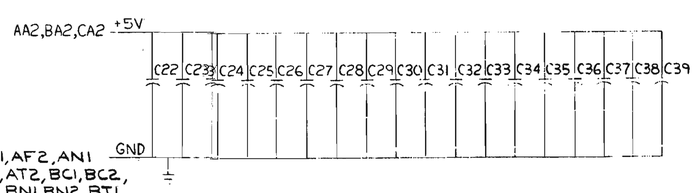

QTY.	REF DESIGNATION	DESCRIPTION	PART NO.	ITEM NO.
2		WASH INT TOOTH #4 HOLE	9006632	58
2		SWITCH MTG BAR	CMD-7408246-0-0	57
4		SPACER 1/4 AF×1/4 LG×#6 HOLE	9006800	56
8		WASH, WHT NYLON #6×.032 THK	9006707	55
4		SCR SLT HD PAN #6 .32×.44 NYLON	9008212	54
2		SPACER 1/4 AF×1/8 LG×#8 HOLE	9007977	53
4		WASH, WHT NYLON #8×.032 THK	9006713	52
2		SCR PHL HD PAN 8-32×.88 NYLON	9008381	51
1		SUPPORT GLASS	D-IA-7408245-0-0	50
10		ROCKER HANDLE, TERRA COTTA	1205849-13	49
11		ROCKER HANDLE, AMBER	1205849-12	48
1	S1	ROTARY SWITCH	1710128	47
28	I1-I28	INDICATOR BULBS	1209219	46
3	E19, E23, E27	I.C. DEC 7416	1909928	45
6	E1, E4 E7, E17, E21, E25	I.C. DEC 8381	1909705	44
1	E15	I.C. DEC 314	[illegible]	43
2	E9, E10	I.C. DEC 7404	1909686	42
1	E11	I.C. DEC 384	1909486	41
9	E2, E13, E16, E18, E20, E22, E24, E26, E28	I.C. DEC 380	1909485	40
1	E14	I.C. DEC 7440	1905579	39
2	E5, E8	I.C. DEC 7410	1905576	38
3	E3, E6, E12	I.C. DEC 7400	1905575	37
4	Q13-Q16	TRANSISTOR DEC 6534D	1503409-00	36
15	Q1-Q12, Q17-Q19	TRANSISTOR DEC 3009B	1503100	35
3	R148, R171, R173	RES. 4.7K, 1/4W, 10%	1300448	34
2	R154, R169	RES. 100, 1/4W, 10%	1300231	33
4	R163, R165, R172, R174	RES. 27, 1/4W, 10%	1301420	32
12	R26, R29, R32, R35, R38, R41, R44, R47, R50, R53, R56, R59	RES. 220, 1/4W, 10%	1300275	31
48	R13-R24, R27, R30, R33, R36, R39, R42, R45, R48, R51, R54, R57, R60-R84	RES. 33K, 1/4W, 10%	1300510	30
15	R1-R12, R158-160	RES. 15K, 1/4W, 10%	1300494	29
29	R88, R90, R92, R94, R96 R98, R100, R102, R104, R106 R108, R110, R112, R114, R116, R118, R120, R122, R124, R126 R142-R147, R151, R152, R157	RES. 3K, 1/4W, 5%	1300432	28
1	R161	RES. 1.8K, 1/4W, 5%	1300398	27
22	R85-R87, R89, R91, R93, R95, R97, R99, R101, R103, R105, R107, R109, R111, R113, R115, R117, R119, R121, R123, R125	RES. 1.5K 1/4W, 5%	1300391	26
6	R149, R150, R153, R155, R166, R168	RES. 1K, 1/4W, 5%	1300365	25
4	R162, R164, R167, R170	RES. 470, 1/4W 10%	1300317	24
27	R25, R28, R31, R34, R37, R40, R43, R46, R49, R52, R55, R58, R127-R141	RES. 390, 1/4W, 10%	1300310	23
1	R156	RES. 150, 1/4W, 10%	1300252	22
1	D120	DIODE D668	1102161	21
114	D1-D105, D109, D116-D119, D121, D122, D127-D160	DIODE D664	1100114	20
4	D106-D108, D110-D115, D123-D126, D129	DIODE D662	1100113	19
19	C21-C39	CAP. .01UF, 100V, 20% DISC	1001610	18
1	C13	CAP. 39UF, 10V, 10% S. TANT	1000076	17
7	C16-C20, C40, C41	CAP. 6.8UF, 35V, 20% S.TANT	1000067	16
1	C15	CAP. 330PF, 100V, 5% D.M.	1000023	15
12	C1-C12	CAP. 68PF, 100V, 5% D.M.	1000014	14
1	C14	CAP. 56PF, 100V, 5% D.M.	1000012	13
2		EYELET	9007827	12
2		TAB	9007112	11
1		LINE CONTROL PANEL	C-CS-1210114-0-0	10
2		NUT, NYLON #4-40	9007992	9
2		SCREW, NYLON #4-40 x 1/2 LG.	9006402-5	8
56		TERMINALS, SOLDERLESS	9007812	7
15		SWITCH, ROCKER RS-50-FB-PC	1205941	6
6		SWITCH, ROCKER RS-9-3-FB	1205375	5
1		ETCHED CIRCUIT BOARD	E-IA-5001056-0-0	4
REF		MODULE ECO HISTORY	B-MH-5409057-0-6	3
REF		ASSY/DRILLING HOLE LAYOUT	J-AH-5409057-0-5	2
REF		X-Y COORDINATE HOLE	K-CO-5409057-0-4	1

PARTS LIST

IC TYPE	GND	+5V
DEC 314	1	8
DEC 384	1	8
DEC 380	1	8

GND AND 5V ARE USUALLY PIN 7 AND 14 RESPECTFULLY EXCEPTIONS ARE STATED ABOVE

IC PIN LOCATIONS

ITEM NO	AWG	FROM PT	TO PT

JUMPER LIST

DEC 6534D	MPS 6534
DEC 3009B	2N 3646
D668	TWO IN 3606 IN SERIES
D664	IN 3606
D662	IN 645
DEC NO.	EIA NO.

SEMICONDUCTOR CONVERSION CHART

REV COLUMN
PRINTED CIRCUIT BOARD REVISION
CIRCUIT SCH. REVISION

ORIGINATED C
CHANGE NO.
REVISIONS
CHK.

DRN. R. E. H. Allen DATE 1/11/71
CHK'D. [illegible] DATE [illegible]
ENGR. [illegible] Vice President DATE 1-12-71
PROJ. ENG. [illegible] DATE 1/12/71
PROD. DATE
FIRST USED ON D-UA-K08-EA-0
SCALE 2/1
SHEET OF 2

digital EQUIPMENT CORPORATION MAYNARD, MASSACHUSETTS

TITLE
EDP B/E FRONT PNL
CONT BOARD

SIZE E CODE CS NUMBER 5409057-0-1 REV. C
DIST.

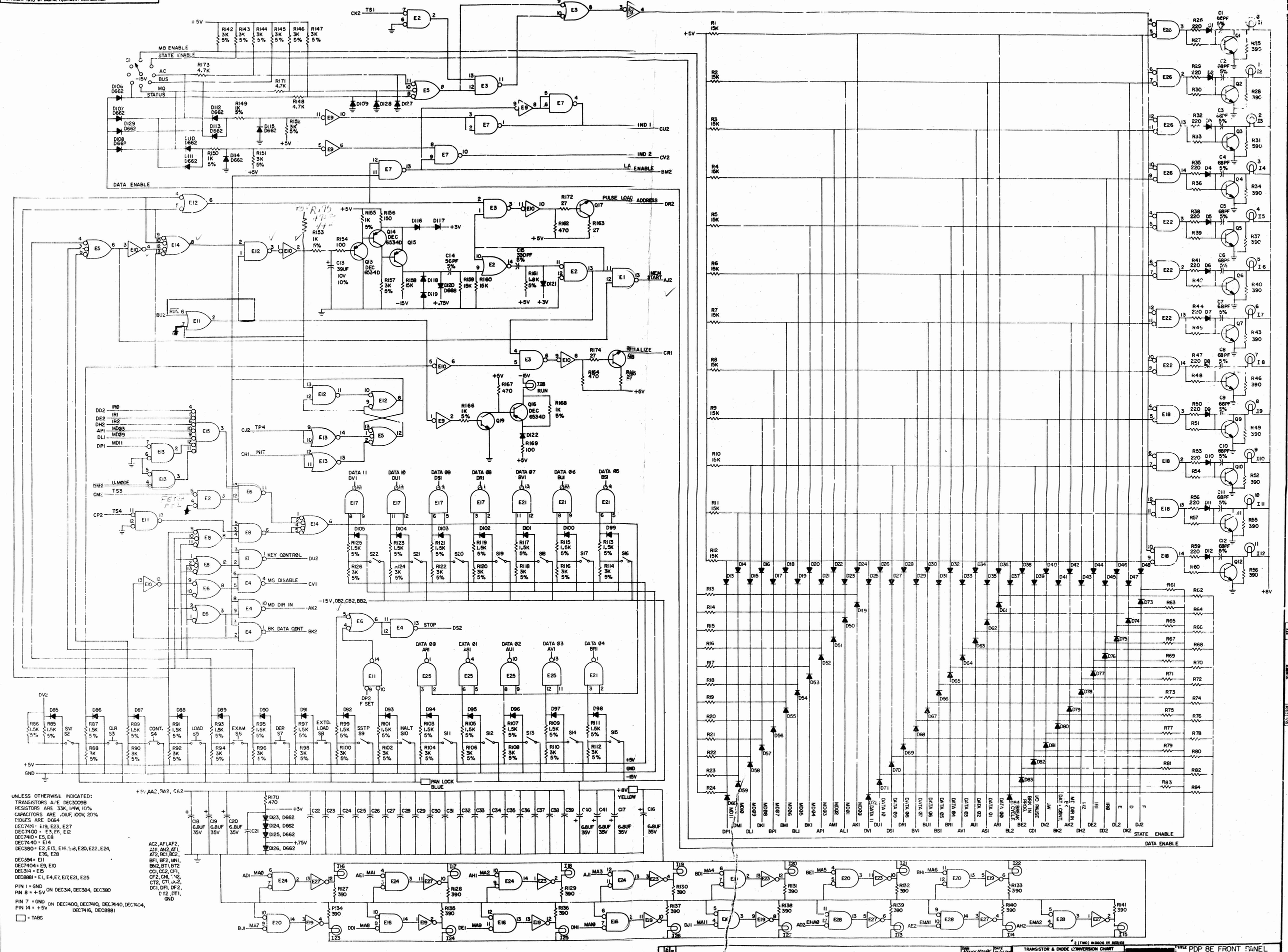
MD ENABLE
STATE ENABLE
AC
BUS
MQ
STATUS
DATA ENABLE
IND 1
IND 2
LA ENABLE
PULSE LOAD ADDRESS
MEM START
INITIALIZE
RUN
KEY CONTROL
MS DISABLE
MD DIR IN
BK DATA CONT
STOP
PAN LOCK BLUE
YELLOW
UNLESS OTHERWISE INDICATED:
TRANSISTORS ARE DEC3009B
RESISTORS ARE 33K, 1/4W, 10%
CAPACITORS ARE .01UF, 100V, 20%
DIODES ARE D664
DEC7415 = E19, E23, E27
DEC7400 = E3, E6, E12
DEC7410 = E5, E8
DEC7440 = E14
DEC380 = E2, E13, E16, E18, E20, E22, E24, E26, E28
DEC384 = E11
DEC7404 = E9, E10
DEC314 = E15
DEC8881 = E1, E4, E7, E17, E21, E25
PIN 1 = GND
PIN 8 = +5V ON DEC384, DEC384, DEC380
PIN 7 = GND
PIN 14 = +5V ON DEC7400, DEC7410, DEC7440, DEC7404, DEC7416, DEC8881
= TABS
TRANSISTOR & DIODE CONVERSION CHART
EQUIPMENT CORPORATION
TITLE PDP 8E FRONT PANEL CONTROL BOARD 5409057